Technology setting standards in reliability and efficiency

AM High Performance Ball Screws

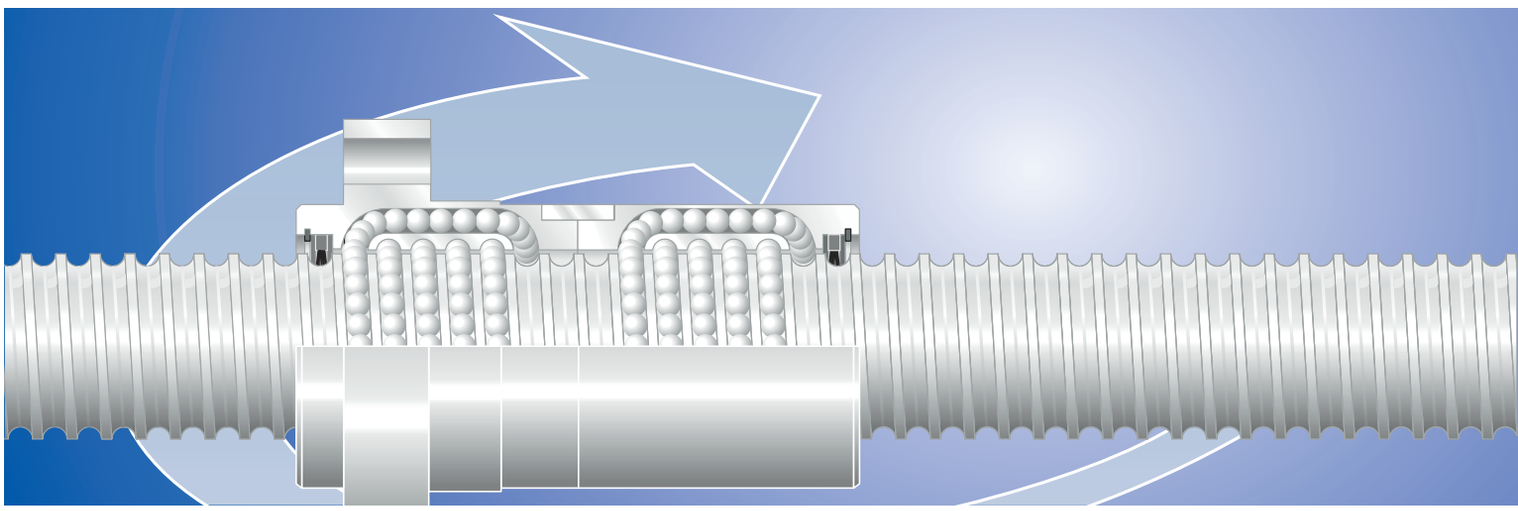

- **Characteristic speed values** up to **n x d = 235,000** do not exceed the limits of our high speed technology
- **Maximum speeds** of **v = 150 m/min** are not the end of our developments
- **Maximum accelerations** of **a = 20 m/s²** reduce process periods significantly
- **Lowest operating temperatures** by lowest frictional torques and highest manufacturing accuracy
- **Excellent running quality** as a result of high axial stiffness, lowest fluctuations of torques and kinematically perfect ball recirculation systems
- **Long-term availability** because of unique wear resistance, as a result of deep-nitrided and ground screws with surface hardness of ≥ 900 HV = 67 HRC
- **Economic efficiency** by extremely high service life, operating reliability, long-term precision and lowest lifecycle-costs
- **AM Hybrid Ball Screws** optimized design, for instance with ceramic balls
- **Special designs** developed in cooperation with customers, exactly tailored to their special applications and demands
- **AM-Telescopic Ball Screws** for innovative applications with small construction lengths and large strokes

Nominal diameter lead combinations

d_0 P	5	10	15	20	25	30	40
25	■	■					
32	■	■	■	■			
40	■	■	■	■	■		
50	■	■	■	■	■	■	■
63	■	■	■	■	■	■	■
80		■		■		■	■
100		■		■		■	■
125		■		■			■
160				■			■

AM Precision A.MANNESMANN MASCHINENFABRIK REMSCHEID

A.MANNESMANN MASCHINENFABRIK GmbH
Bliedinghauser Str. 27
42859 Remscheid
Germany

Tel. +49 2191 989-0
Fax +49 2191 989-201
Internet:
www.amannesmann.de
E-Mail:
sales@amannesmann.de

© 08.11 AM